# Two cylinder points controlled transistor ignitor

## 1. Technical parameters

| | |
|---|---|
| Operating voltage: | 8 … 16V |
| Maximal load pro cannel: | 6A |
| Input threshold: | apx. 3.5V below supply voltage |
| Supply overvoltage protection: | 18 V (suppressor diode) |
| Primary coil voltage limitation: | 360V (varistor) |
| Protection: | IP 68 (dust and water proof) |

## 2. Usage

This unit is designed for any two-cylinder motorcycle with points ignition. In case of one-cylinder machine both channels can be parallel connected (input with input, output with output). This doubles the maximal switching current. In case of four-cylinder bike one needs two units. The function of this device is to switch the ignition coils without loading the points. The current through the points will be only several tens of mA (instead of 2 … 3A) and the voltage across the points at the moment of breaking will be equal to the board voltage (12 … 14.5V instead of 200 … 300 V). The points will never more burn out, the adjustment will have to be done once per several ten thousand km, the spark voltage will be higher and the spark will be more precisely timed resulting in better starting of engine, quiet run, lower consumption and emissions.

## 3. Installation

- Clean the points (or rather replace them) and adjust the ignition
- Disconnect the battery
- Remove the capacitors from the points
- Install the ignitor to any place of the motorbike, but not too close to the engine or exhaust pipes (they are too hot). Use wires with cross-section min. 1.5 $mm^2$ for ground and coils connections. For other connections 0.75 $mm^2$ is enough.

  *Warning:* Connection of outputs and + 12V may result in destruction of transistors. The ignitor must be supplied from the line “+12V Ignition”, not directly from the battery, otherwise the battery will be discharged or even the ignition coil will burn out during the shut-down time.

- Connect the battery – no LED hast to light. Switch the ignition ON - the green LED must light.
- Try to short the points. The corresponding red LED must light.
- Run the engine and adjust the points again.

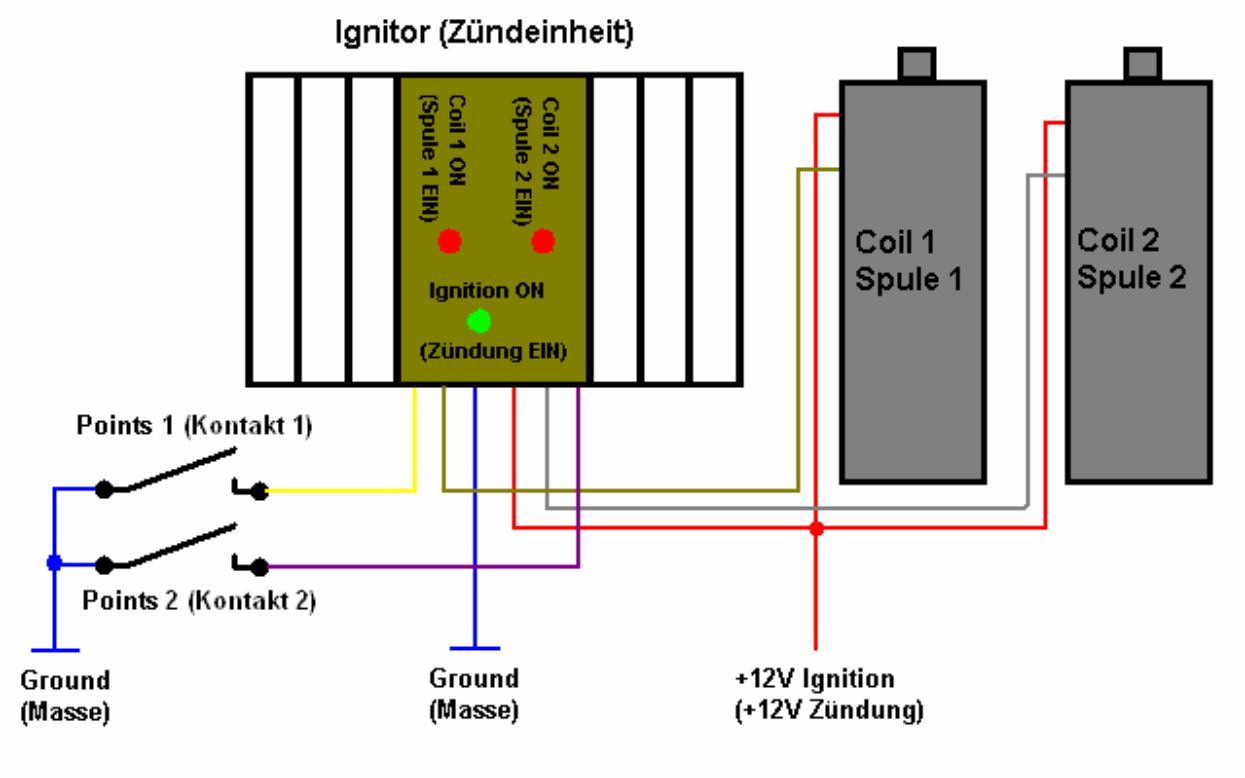
Ignitor (Zündeinheit)
Coil 1 ON
(Spule 1 EIN)
Coil 2 ON
(Spule 2 EIN)
Ignition ON
(Zündung EIN)
Coil 1
Spule 1
Coil 2
Spule 2
Points 1 (Kontakt 1)
Points 2 (Kontakt 2)
Ground
(Masse)
Ground
(Masse)
+12V Ignition
(+12V Zündung)